ELECTRICITY AND MAGNETISM

STATIC ELECTRICITY- (electrostatics) – is the study of electric charges at rest.

- A body is electrically charged when
  - It has more protons than electrons (positively charged).
  - It has more electrons than protons (negatively charged).

- The force between two charged bodies may be **repulsive** or **attractive**.

Experiments show that:

1 **like charges repel** and **unlike charges attract**, and

2 the force of attraction or repulsion decreases as the charges are moved further apart.

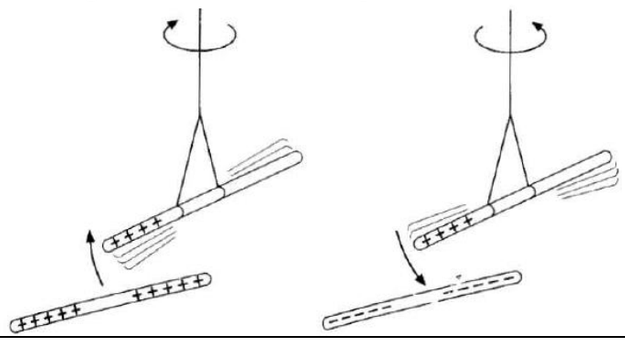

- The symbol for electric charge is Q and the coulomb is the unit of electric charge and its symbol is C.

A conductor is material which allows charges to flow through it easily.

- An insulator is a material which does not allow charges to flow through it easily.

- Bodies can be charged in three ways: -
  - charging by friction
  - charging by induction.
  - charging by contact

Electric fields

An **electric field** is defined as: a region in which an electric charge will experience a force.

- The field lines of force are directed away from a positive charge and towards a negative charge.
- A single point charge has a radial field pattern.
- The closeness of the field lines also gives an indication of the strength of the electric field at that point.
- The diagrams below represent the fields for different arrangements of point charges and between charged parallel plates.

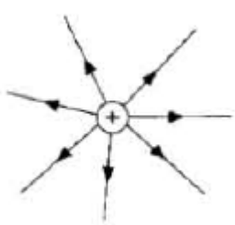

Electric field for a **single positive charge**

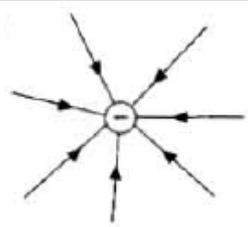

Electric field for a **single negative charge**

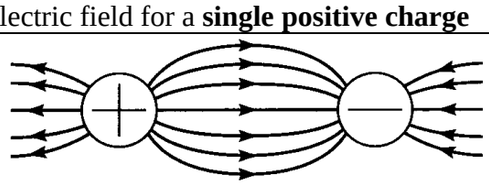

Electric field for two opposite charges(attraction)

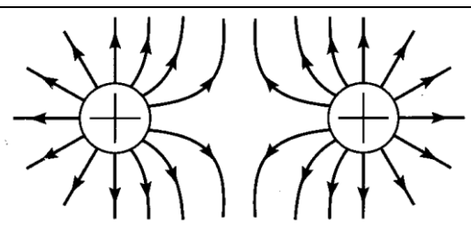

Electric field for two like charges (repulsion)

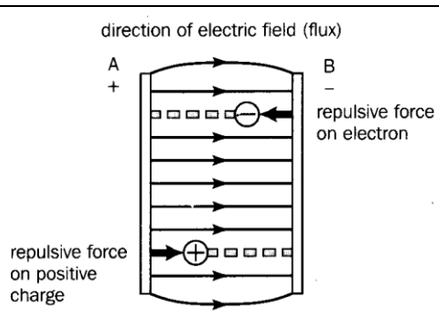

Electric field between two oppositely charged plate

- The potential, V, at a point in the field is the work done in bringing a unit positive charge (+1C) from outside the field to that point in the field.

CHARGING BY FRICTION

An object becomes charged by adding electrons, negative (-) charges, to it or by taking away electrons from it. This is usually done by rubbing two objects together. This process is known as charging by **friction.**

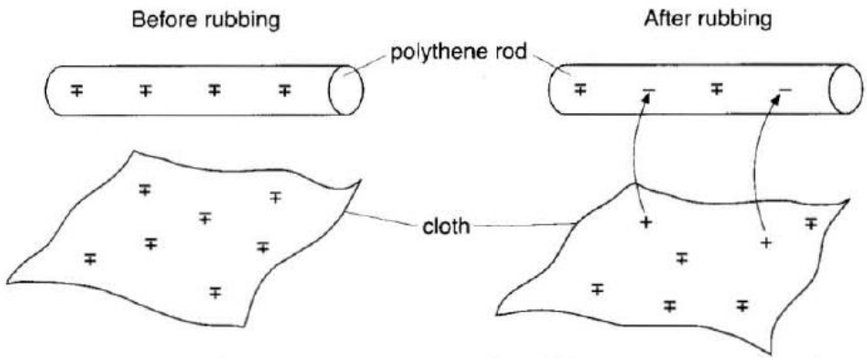

- An **acetate rod** rubbed with cloth becomes **positively charged**,
- while a **polythene rod** will become **negatively charged**

CHARGING BY INDUCTION

Charging two insulated metal spheres by induction

11.7 *Charging by induction*

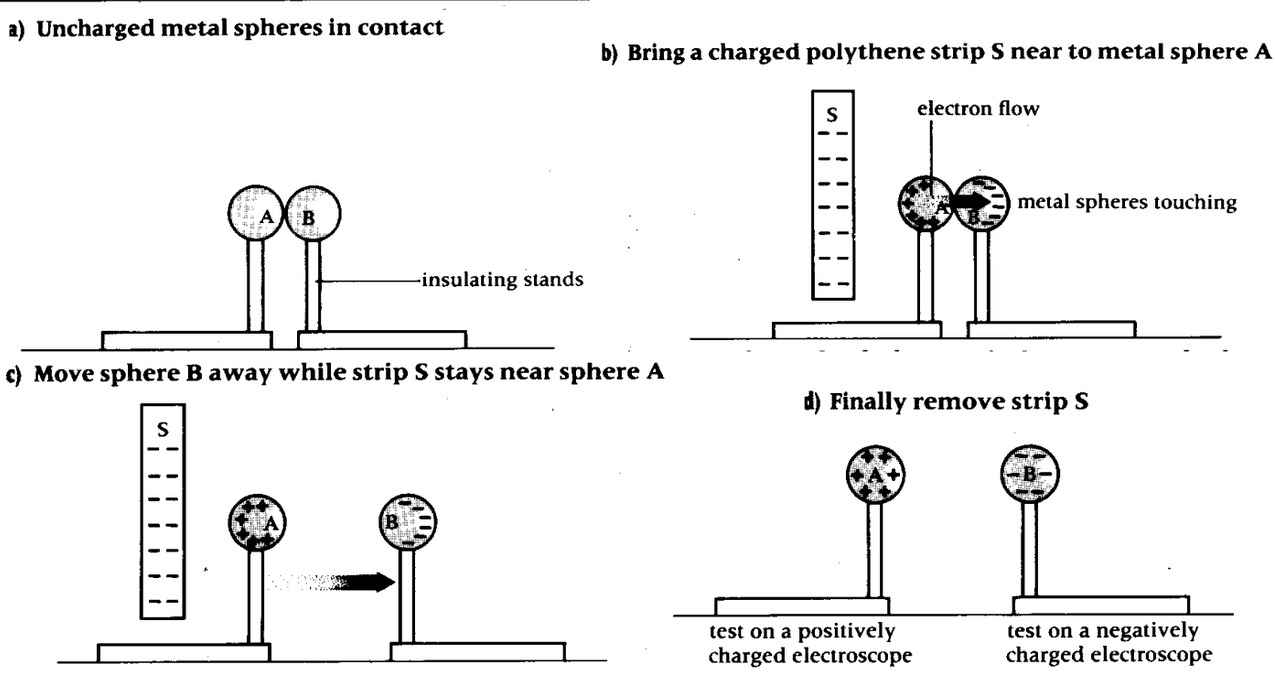

Charging an insulated metal sphere by induction

Figure 11.8 *Charging by induction*

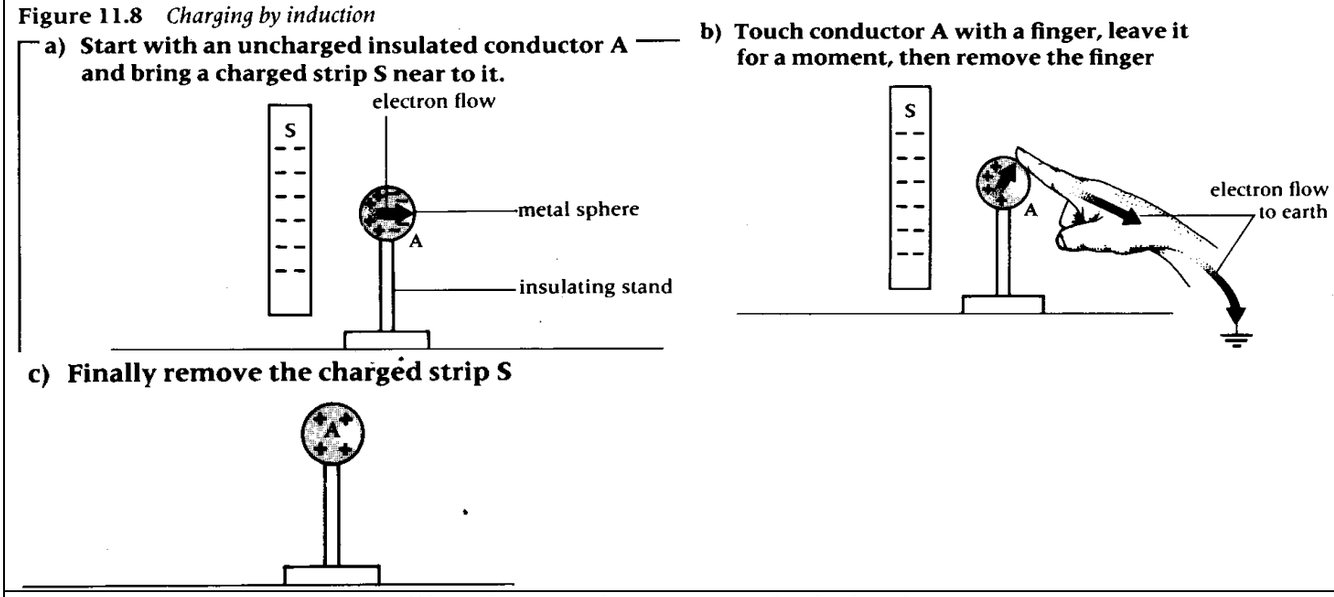

Charging an electroscope by induction

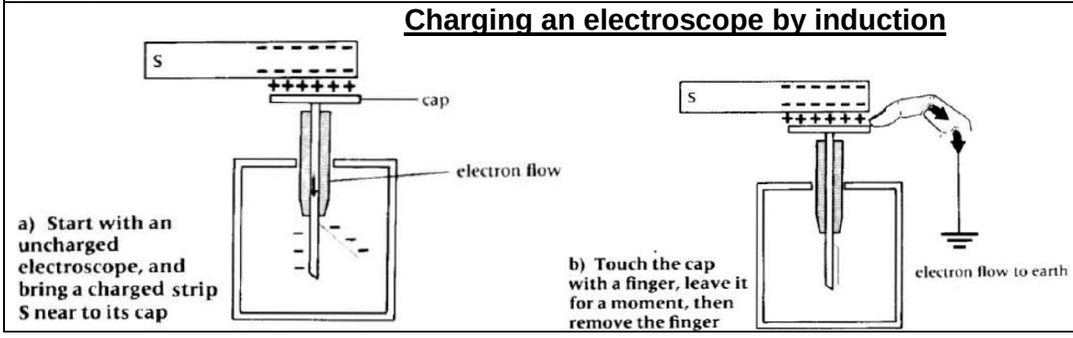

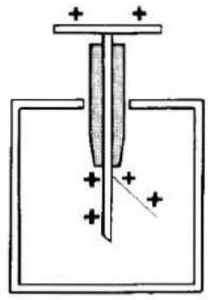

c) Finally remove the charged strip S

Charging by contact

An uncharged conductor which is in contact with a charged conductor acquires the same sign of charge

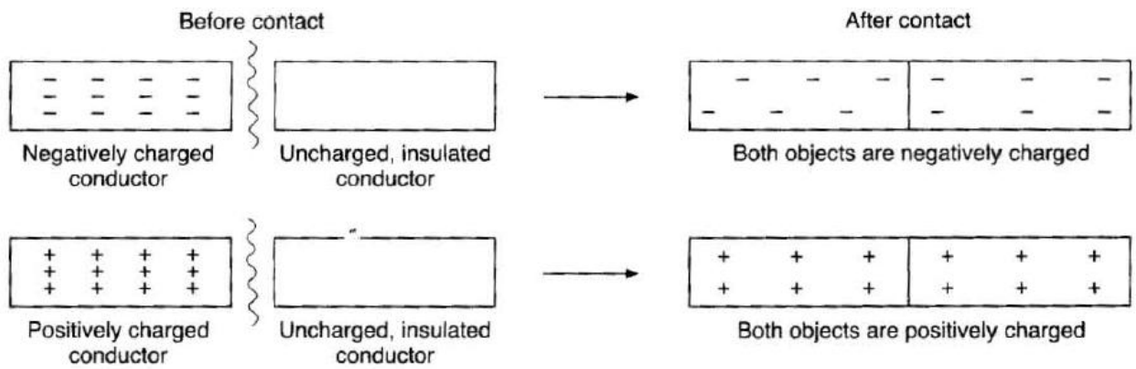

The **DISTRIBUTION OF CHARGE** on a conductor depends on the **SHAPE** of the conductor.
Charge tends to concentrate more at **points**. Because of this, points are able to acquire charge from - and so discharge - a conductor. This effect is used in lightning conductors on tall buildings.

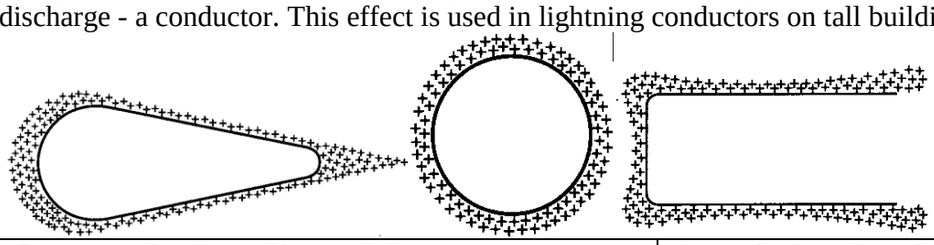

The van de Graaff machine

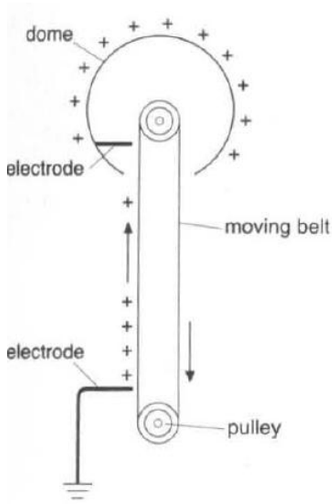

A van de Graaff machine can generate very high voltages. It contains a hollow conducting sphere - a dome which rests on an insulating stand (why?). A belt of insulating material - usually rubber - is turned by a motor. The moving belt takes charges from an earthed conductor to the top of the dome.

A hair-raising experience: the girl stands on an insulated base such as polythene and touches the dome lightly. Charge spreads over the surface of her body. Strands of hair all acquire the same charge and repel each other.

Uses of static Electricity

Photocopying, crop spraying, dust extraction and spray painting

hazards of static Electricity

LIGHTNING

During a storm, clouds become highly charged with electricity. The ground is then at a much lower potential than the clouds and the charges are released to the ground. This phenomenon is known as **lightning.**
The discharge could be of many thousands of volts and is a hazardous occurrence.

Dangerous amounts of electrical charge can build up, for example at the pumps in petrol stations and also in some electrical appliances in the home.

Current Electricity

- The **potential difference**, ***V/V,*** between two points A and B, is the **work done** in bringing unit positive charge from point A to point B.

- In other words the potential difference is the work done per unit charge and we can write.

$$V = \frac{W}{Q}$$

- Since work done is equal to the energy converted, an alternative definition of potential difference: The **Potential difference (p.d.)** between two points is the work done per coulomb when electrical energy is converted into some other form of energy when a current flows in a circuit.

i.e. ***V=E/Q***

- The **volt**, V, is the potential difference between the ends of a conductor if one joule of energy is converted per coulomb of charge that flows. **1V = 1JC^{-1}**
- **Current**, ***I/A,*** is the rate of flow of charge. I = Q/t .
- The unit of current is the **ampere (A)** which is defined in terms of the force between current carrying conductors. An ammeter measures the magnitude of the current. **1 ampere = 1 coulomb per second**

- The unit of charge is the **coulomb** (C). A coulomb is the quantity of charge which passes a point in a conductor when a steady current of 1 ampere flows for one second.

charge = current x time
i.e. Q = It

- **One coulomb** is the charge flowing when a steady current of one ampere flows for one second.

1C = 1As

- In a metal, the current consists of a flow of negative electrons. However, in other conducting media positive charges can flow e.g. positive ions in electrolysis.
- The electric current in a metal is a flow of electrons towards the positive pole in a cell. Current is considered to be positive so **conventional current** flows from **positive to negative**. In other words, the flow of the current is in the opposite direction to the electron flow.

1. **Conductors** are materials which allow the free flow of electric charges. Metals are good conductors because the electrons in the atoms are relatively 'free' to move.
2. **Insulators** have few 'free' electrons and charges cannot move freely through them.

In **electrolytes** and **semiconductors** the electric current is due to both positive and negative charge carriers or ions.

For some conductors the current passing through the device is proportional to the potential difference across it. The constant of proportionality is called the resistance of the device.

$$V \propto I \text{ therefore } R = \frac{V}{I}$$

- **Ohm's law** states that the current passing through a wire at constant temperature is proportional to the potential difference between its ends. A body is said to be ohmic if ohm's law is true for the device. Not all devices are ohmic.

- **Electromotive force (e.m.f.): The** electromotive force is the work done per coulomb when some other form of energy is converted into electrical energy at a cell or generator.
- Consequently both p.d. and e.m.f. have the same unit called the **volt** (V). One volt is one joule per coulomb (1J C^{-1}). Both p.d. and e.m.f. are measured with a **voltmeter.**
- The e.m.f. is the total amount of energy a cell or generator can produce and is the sum of all the p.d.s in a circuit.

POWER is the rate of energy transfer (or the rate at which work is done.)

P = E/t = QxV/t =ItV/t = IV that is **power = current x voltage**

- Thus, **P = IV** also **P = I^{2}R** and **P = V^2/R**

ENERGY: the capacity for doing work.

Energy = power x time **i.e.** **E = Pxt** or **E = IVt**

Question1

A charge of 40 C leaves a battery and supplies 800J of electrical energy to a lamp connected to it. Find :

a. the p.d. of the battery

b. the current from the battery if the charge passes in 20 seconds.

Question2

The p.d. across a lamp is 12 V. how many joules of electrical energy are changed into light and heat when

a. a charge of 3 C passes through it

b. a charge of 7 C passes through it

c. a current of 2 A flows through it for 15 s?

The starting motor of a car draws a current of 60 amperes from a 12-volt battery for 7 seconds. Calculate

a) the charge flowing,
b) the power dissipated,
c) the energy transferred.

A 200W street lamp is on 10 hours each day.
How much energy in joules does the lamp use in one week?

DIRECT CURRENT (d.c.)

The simple flow of charge when electrons leave the negative terminal of a battery and flow around a circuit to the positive terminal is known as **direct current,** or d.c.

• Direct current flows in one direction only.
• Direct current may be steady or fluctuating.

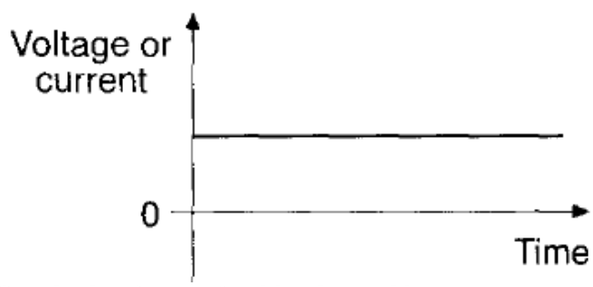

Steady d.c. from a freshly charged battery.

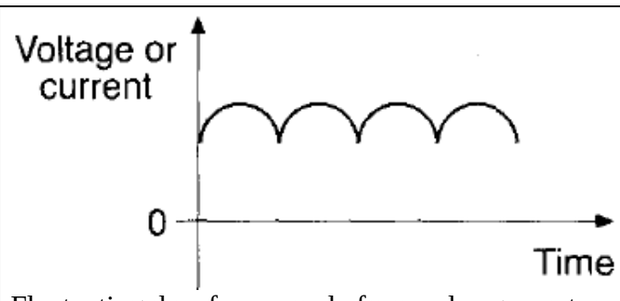

Fluctuating d.c., for example from a d.c. generator.

✓ Batteries supply d.c.
✓ d.c. deflects the pointer of a moving-coil meter in one direction only.

ALTERNATING CURRENT (a.c.)

With alternating current (a.c.), the electrons flow backwards and forwards in the circuit. Alternating current reverses direction periodically.

- a.c. has a **sinusoidal** wave pattern.
- This pattern is normally displayed and studied on a **cathode ray oscilloscope (c.r.o)**

The **frequency** of the mains supply is **50 Hz** (50 cycles per second) in some countries and **60 H**z in others.

- A 50 Hz supply changes direction 100 times each second
- a 60 Hz supply changes direction 120 times each second.
- Electricity supplied on the domestic mains is a.c.

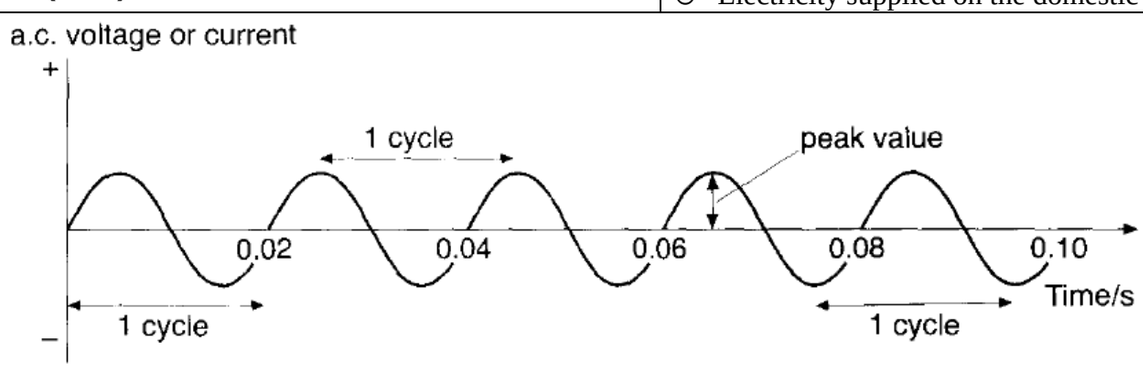

Graph of voltage or current against time for a 50Hz a.c. supply. **(sinusoidal** wave pattern of a.c.)

- the a.c. signal varies in value over a cycle;
- the a.c. signal shown above reverses direction 10 times every 0.1 s: its frequency is therefore 50 Hz:
- the time for one cycle is known as the **period** *T:*
- frequency*:* $\mathbf{f} = \frac{\mathbf{1}}{\mathbf{T}}$
- a 50 Hz a.c. signal has a period of 0.02 s.
- Both the peak value and the frequency of a.c. signals can be read off current (or voltage) versus time graphs.

EFFECTIVE VALUE of a.c.

The **working** or **effective value** of a.c. that is normally used in formulas to calculate power, energy and other quantities is the root mean square **(r.m.s.)** value of the a.c. signal.

Effective value = r.m.s. value = 0.7 peak value

N.B.: Low frequency a.c. makes the pointer of a moving-coil meter move to and fro. With high frequency there is no apparent movement.

Example An alternating signal has a period of 0.01 s. a) What is its frequency? b) How many times per second does this signal reverse polarity (i.e. positive ↔ negative)?	○ Generators can supply both a.c. and d.c.: ○ a.c. is better for the transmission of power. ○ At present most electricity is generated as a.c. ○ a.c. and d.c. arc equally satisfactory for heating and lighting.

Solution

a Frequency $= \frac{1}{T} = \frac{1}{0.01}$ Hz = 100 Hz or 100 cycles/s.

b Since an a.c. signal reverses polarity twice every cycle, a 100 Hz signal reverses $100 \times 2 = 200$ times per second.

Comparison of d.c and a.c.

d.c.	**a.c.**
– fixed direction – may be steady in magnitude from a given source – its value cannot be stepped up (increased) or stepped down (decreased) by a transformer – has an associated heating effect – has an associated magnetic effect – can be used in electrolysis, electroplating and battery charging	– reverses direction – varies between reversals of polarity – can be stepped up or down as required by a transformer – has an associated heating effect – has an associated magnetic effect – cannot be used in electrolysis, electroplating and battery charging – can be converted to d.c. using rectifiers.

Circuit Diagrams

A circuit diagram is a simple and clear way to record how a circuit is constructed. Special symbols are used to represent all the common devices that are used in electrical circuits and to show how they are connected.

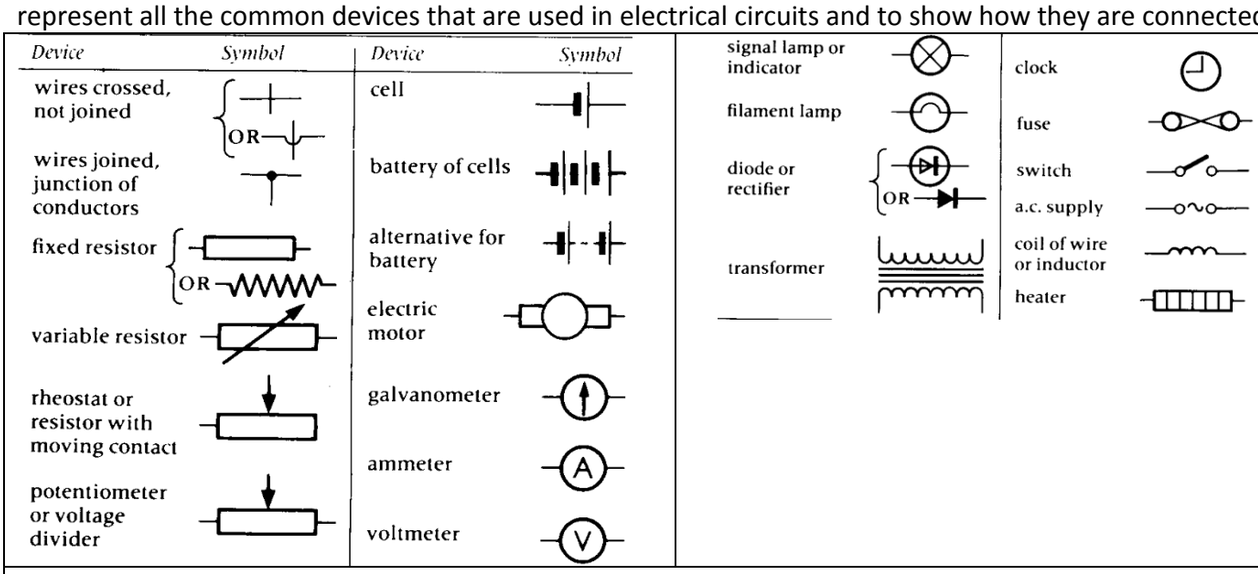

Types of electric circuits

A **closed circuit** is any continuous path round which an electric current flows.

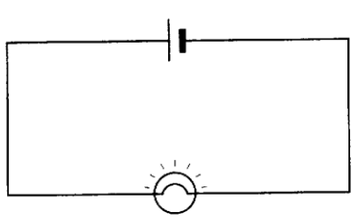

Figure 1

This circuit reveals three features that are common to all electric circuits. All closed electric circuits:

- have a source of potential difference (sometimes called a voltage source or an e.m.f.);
- have a complete conducting path for current flow;
- contain resistance; the lamp provides the resistance in this case.

An **open circuit** is one in which there is a break in the conduction path. The lamp in Figure 2 does not light because there is a break in the circuit.

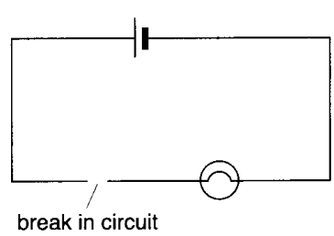

Figure 2

A **short circuit** occurs when a voltage source or potential drop has a closed path of low resistance across its ends. The lamp in Figure 3 does not light because almost no current flows through it. Most of the current flows through the short circuit.

N. B.: Short-circuiting is a fire hazard as large

amounts of heat are normally generated.

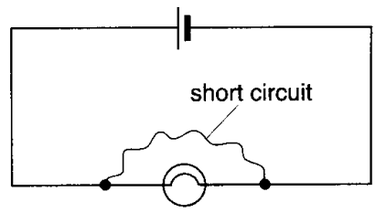

Figure 3

Series circuit

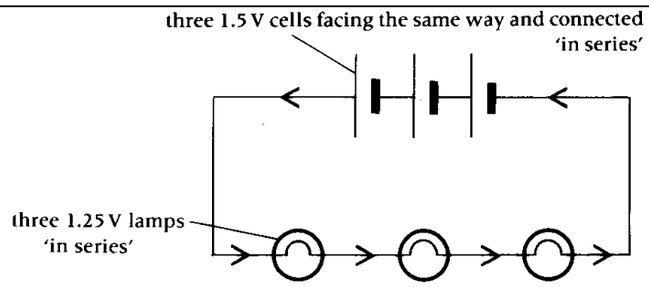

These lamps are connected in series.

- The lamps share the voltage from the battery, so each has equal brightness.
- If one lamp is removed, the others go out because the circuit is broken.

parallel circuit

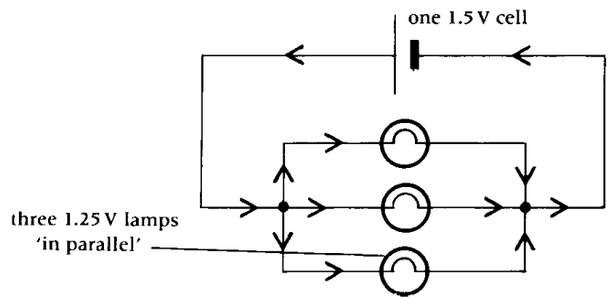

These lamps are connected in parallel.

- Each lamp gets the full voltage from the battery because each is connected directly to it, so each glows brightly
- If one lamp is removed, the others keep working because they are still part of an unbroken circuit.

CELLS

The zinc-carbon dry cell

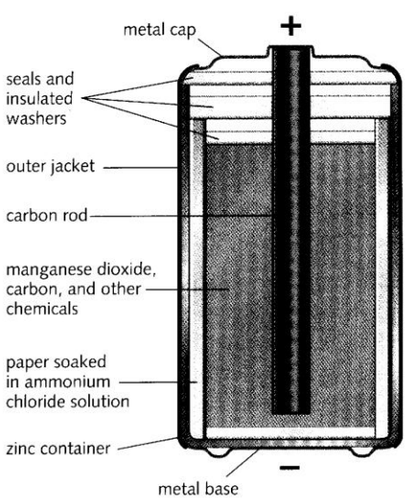

- Carbon rod: positive electrode and current collector
- Zinc case: negative electrode
- Ammonium chloride solution: electrolyte
- Manganese dioxide: stops polarization

Primary and Secondary cells

Characteristics of Primary cells (Eg. Simple cell, dry cell (zinc-carbon cell))	Characteristics of Secondary cells (eg lead-acid cells in car batteries)
❑ chemical reactions are not easily reversible ❑ cannot normally be recharged ❑ must be replaced with a new one when fully discharged ❑ portable ❑ produce small currents ❑ usually have lower emf than secondary cells ❑ have larger internal resistance than secondary cells ❑ cheaper to produce ❑ easier to install	❑ must be charged before use ❑ can be recharged over and over again ❑ the chemical reactions are reversible ❑ not as portable as primary cells ❑ can produce large currents ❑ usually have higher emf than primary cells ❑ have smaller internal resistance than primary cells ❑ more expensive to produce ❑ harder to install

Recharging a secondary cell

To charge (or recharge) secondary cells:

- low charging currents should be used
- the *positive* terminal of a d. c. supply must be connected to the *positive* terminal of the cell or battery
- the emf (voltage) of the d. c. supply must be *greater* than that of the cell or battery

The diagram below shows a simple charging circuit.

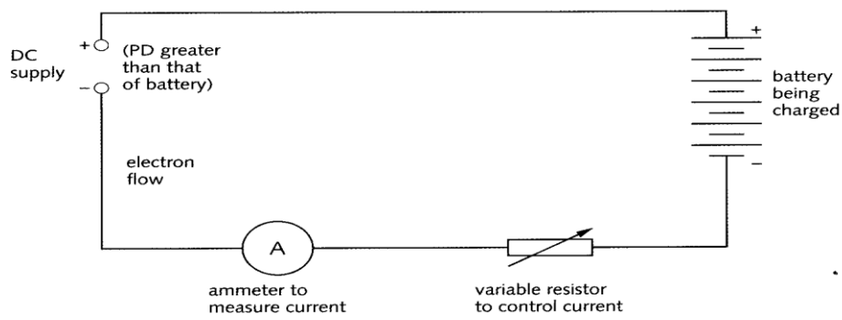

N. B.: Overcharging produces gases, which can be dangerous.

1. what is the function of:
   a. the ammonium chloride paste
   b. the manganese dioxide

   in the zinc-carbon cell ?
2. Give three differences between primary cells and secondary cells.

   Outline clearly with the aid of a diagram how you would recharge a 12 volt car battery.

Resistance, R

The resistance of a conductor is its impedance to current flow. Resistance of a conductor depends on its: ❑ Length ❑ Cross-sectional area ❑ Type of material ❑ Temperature	$resistance = \frac{voltage}{current}$, $R = \frac{V}{I}$, S. I. Unit of resistance is the **ohm (Ω)** **The ohm** The resistance of a device is one ohm if the current through it is one ampere when the potential difference across its ends is one volt.

Resistors are devices that oppose, control, or limit the current in electrical circuits.

Types of resistors

- **Fixed resistors** have one specific value, eg. 5 ohms or 1 million ohms.
- **Variable resistors (rheostats)** are used for varying current.
- **Thermistors** have a high resistance when cold but a much lower resistance when hot.
- **Light-dependent resistors (LDRs)** have a high resistance in the dark but a low resistance in the light.
- **Diodes** have an extremely high resistance in one direction but a low resistance in the other. In effect, they allow current to flow in one direction only.

The resistance of ammeter and voltmeter

Ammeters should have as low a resistance as possible so that the total circuit resistance is not increased. A greater circuit resistance would reduce the circuit current.

The **ideal voltmeter** should have infinitely large resistance so that no current flows through it. Any current flowing through a voltmeter means an increase in the total circuit current, which will affect the voltmeter reading.

Instrument	Measured Quantity	Proper Connection
Voltmeter	Voltage	In Parallel
Ammeter	Current	In Series
Ohmmeter	Resistance	Only with Resistor

Resistors connected in Series

The resistors R_1, R_2 and R_3 below are of different values. They are connected in **series.**

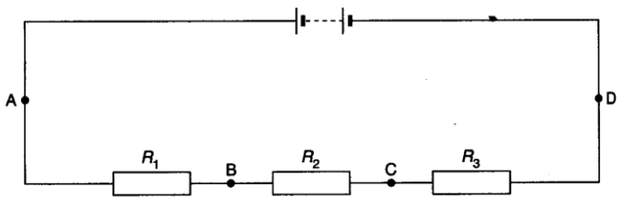

Resistors in series.

For series circuits:

- the **SAME CURRENT, I** flows through all components (CURRENT IS **NOT** SPLIT UP)
- the total resistance, $R_s = R_1 + R_2 + R_3$;
- the total voltage or emf (V_s) of the power supply is the sum of the individual voltages across each resistor
  - $V_s = V_{R1} + V_{R2} + V_{R3}$
  - $V_s = IR_s$
- if there is a break at any point in the circuit, no current flows;
- the total power dissipated is equal to the sum of the powers dissipated in the individual resistors.
  - $P_s = P_1 + P_2 + P_3$,
  - $P_s = IV_s$
  - $P_1 = IV_1$; $P_2 = IV_2$; $P_3 = IV_3$

Resistors connected in Parallel

For the parallel arrangement of resistors below

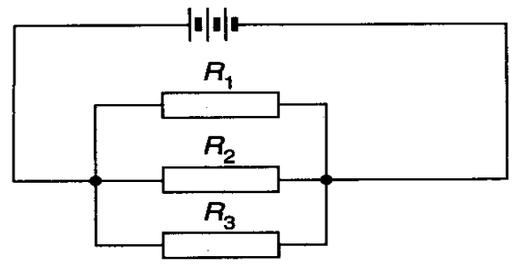

Resistors in parallel.

- the potential difference, **V** across each parallel branch or load resistor is the **SAME** and is equal to the potential difference of the battery; (VOLTAGE IS **NOT** SPLIT UP)
- the reciprocal of the total resistance equals the sum of the reciprocals of the individual resistances:

$$\frac{1}{R_P} = \frac{1}{R_1} + \frac{1}{R_2} + \frac{1}{R_3}$$

- the **total current, I_p** is the sum of the currents in the individual branches: $\mathbf{I_p = I_1 + I_2 + I_3}$ (CURRENT SPLITs UP along branches)
- the total resistance for a parallel combination of resistors is always less than the value of the smallest resistance;

  the **total power dissipated, P_s** equals the sum of the powers dissipated in the individual resistors;
  - $\mathbf{P_s = P_1 + P_2 + P_3}$
  - $\mathbf{P_s = I_p V}$
  - $P_1 = I_1V$; $P_2 = I_2V$; $P_3 = I_3V$
- a break in any branch of a parallel circuit does not affect other branches. However, the total current decreases;
- adding an extra branch in parallel with those already present increases the total current taken from the cell or battery.

Problems

2. What is the current flowing through a lamp of resistance 2Ω which is connected to a 9V d.c. power supply with the switch closed.
3. What potential difference is needed to drive a current of 0.5 A through a heating filament of resistance 10 Ω?
4. Explain why ammeters should have very low resistance while voltmeters should have infinitely high resistance.
5. A battery of 20 V is connected to a series arrangement of 5Ω, 3 Ω and 2 Ω resistors.
   i. Draw a circuit diagram to represent this information.

   What is:

   ii. the effective resistance in the circuit?
   iii. the current flowing?
   iv. the potential difference across each resistor?
   v. the total power dissipated in the circuit?

6.

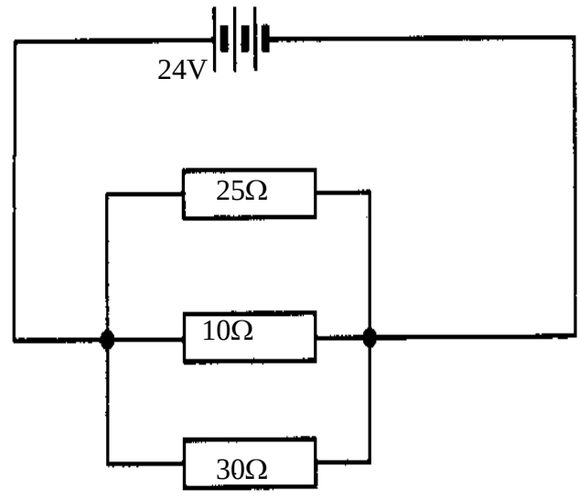

Determine

(i). the total resistance in the circuit above
(ii). the current drawn from the battery,
(iii). the potential difference across each of the resistors,
(iv). the current through the 30Ω resistor,
(v). the current through the 25Ω resistor.
(vi). What is the total current
(vii). Calculate the total power dissipated

a. What is the effective resistance of the 3Ω and 5Ω resistors in circuit a?
b. What is the effective resistance in the entire circuit?
c. What is the current flowing through the 20Ω resistor?
d. What is the current flowing through the 3Ω resistor?
e. Determine the potential difference across the 20Ω resistor.

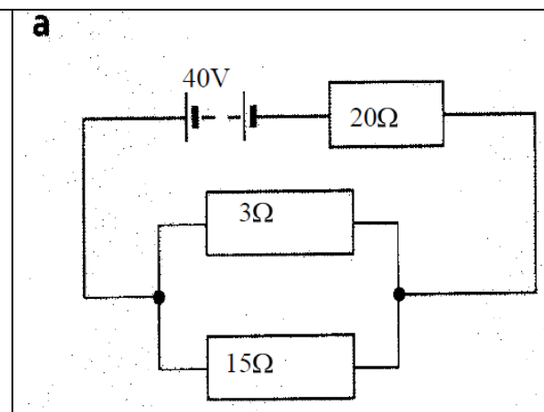

I-V Relationships

Ohm's law: the current through a metallic conductor is directly proportional to the applied potential difference across its ends if temperature and other conditions are kept constant.

Variation of current with voltage in:

(a) **Metallic conductors** at constant temperature

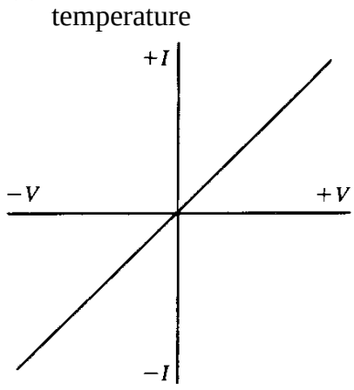

Current is directly proportional to voltage and resistance is constant. This conductor closely obeys Ohm's law

(b) Filament lamps

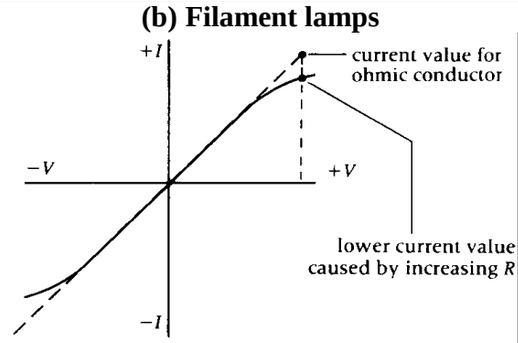

Graph obeys ohm's law at low currents (straight line). Increasing resistance due to rising temperatures is responsible for the curve part of the graph.

(c) Semiconductor diodes

(d) Electrolytes

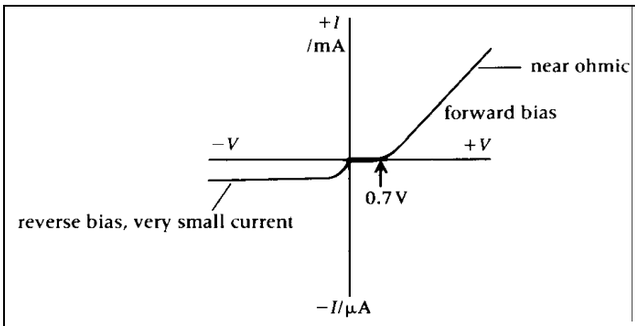

A semiconductor diode is a **non-ohmic** device

Copper sulphate solution with copper electrodes is ohmic, but dilute sulphuric acid with carbon electrodes requires 1.7 V in either direction before conduction begins

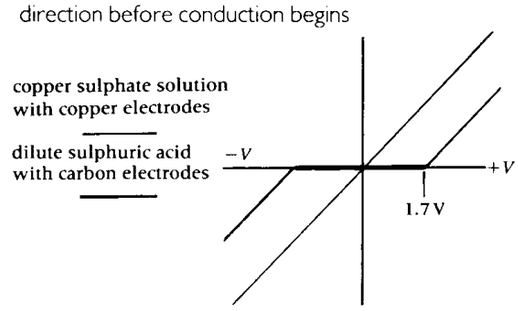

Electricity in the Home

Reasons for using parallel circuits in the home

- Appliances will use only as much current as is needed
- multiple appliances can be operated independently of each other
- it is safer

Electrical Safety devices

Fuses

Fuses use the heating effect of an electric current to break or open a circuit when an excessive current flows thus reducing the danger it poses. Fuses may be made of tinned copper wire. They rated according to the maximum safe current they can carry. The fuse should blow when a fault develops so that this safe current is not exceeded. Three-pin plugs are usually fitted with either 3A, 5A, or 13A fuses.

Circuit breakers

Circuit breakers are resettable switches that protect equipment from excessive currents by opening or tripping when a specified safe current is exceeded.

Earth wire

This is a safety wire. It connects the metal body of an appliance to earth and stop it becoming live. If the live wire becomes loose and touches the metal body, a current immediately flows to earth and blows the fuse.

International insulation colour code

- Live wire: **brown** insulation
- Neutral wire: **blue** insulation
- Earth: **green/yellow** insulation

Adverse Effects of Incorrect or Fluctuating Voltage

- electrical fires
- damage appliances
- decreased power output of appliances
- electrocution

Rectification

1. Rectification refers to the process of converting from a.c. to d.c.
2. Semiconductor diodes are used to rectify ac. They are made by growing n and p-type crystals together. The point at which the two crystals join is called a p—n junction. If the positive of a battery is joined to the p-type and the negative to the n-type, the diode conducts due to 'holes moving from p to n and electrons from n to p: it is said to be forward biased. Connecting the battery the other way, reverse biases the diode and little or no current flows

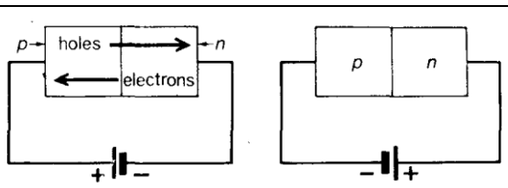

(a) Forward bias (b) Reverse bias

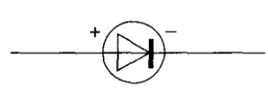

The symbol for a diode.

3. **Semiconductor diodes** function as one-way electrical valves — they allow current to flow in one direction only.

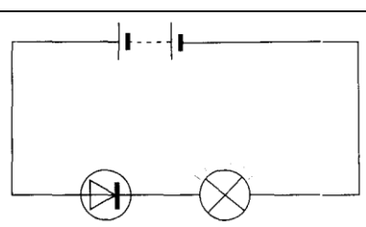

Figure 23.4 *The diode is forward biased. The lamp lights.*

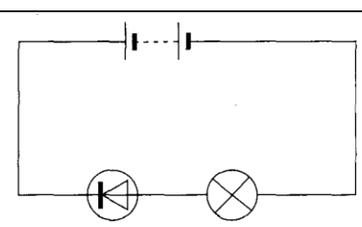

Figure 23.5 *The diode is reverse biased. The lamp does not light.*

Characteristics

4. Diodes, when forward biased, have
   a. reasonably low resistance
   b. conduct an electric current.
5. The reverse-biased diode has
   a. very high resistance
   b. negligible current passes.
6. Overheating and other unsuitable treatment will destroy' diode properties.
7. An '<u>open diode</u>' has infinite resistance in both directions. It does not conduct in either direction.
8. A diode which has been **shorted** has low resistance in both directions. It conducts equally well in both directions.
9. A diode **<u>DOES NOT</u>** conduct unless the forward voltage exceeds a certain minimum value. For silicon, this voltage is 0.6 V.

<u>The diode as a rectifier</u>

- Diodes convert a.c. to dc. a process known as rectification.
- A single diode will give you <u>half-wave rectification</u>

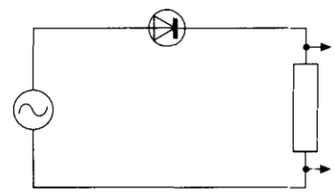

Half-wave rectification of the a.c. signal by the diode

The negative half cycles of the alternating current have been clipped off in half-wave rectification because the diode does not conduct on these half cycles. During these half cycles the diode is effectively reverse biased.

10. <u>Full-wave rectification</u> can be achieved by using a network of four diodes as shown below. This network is referred to as a <u>bridge rectifier</u>'.

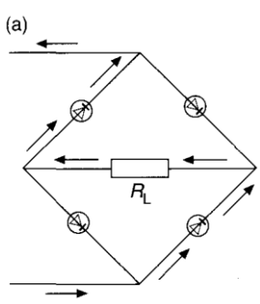

The bridge rectifier.

(b) Full-wave rectified output, as displayed on the screen of an oscilloscope

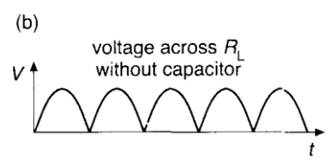

A **capacitor** is used to smooth the fluctuating d.c. so that the value of the current is approximately constant.

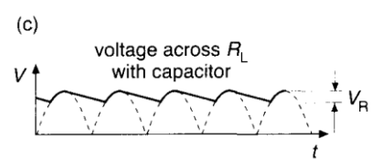

(c) A rectified signal that has been 'smoothed'.

<u>Capacitor</u>: a device which collects and stores electricity, and is an important part of electronic equipment such as televisions and radios.

1. What size current will be drawn from the battery below? Give your reasoning.

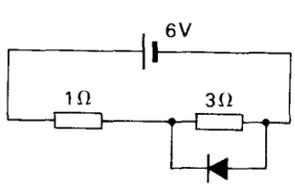

If the battery is turned round, what size current will it now, supply? Explain.

2. Explain with the aid of diagrams rectification.

<u>Magnetism</u>

Magnetism is a **<u>force</u>** that acts at a distance and makes a magnet:

- attract and repel other magnets;
- attract iron. nickel. cobalt and a few other substances.

<u>Magnetic poles</u>

Iron filings cling mostly to the ends of a bar magnet

- This indicates that the magnetic effect is **greatest** at the **ends or poles** of the magnet.
- Each magnet has **two poles** – a **north pole** and a **south pole**.

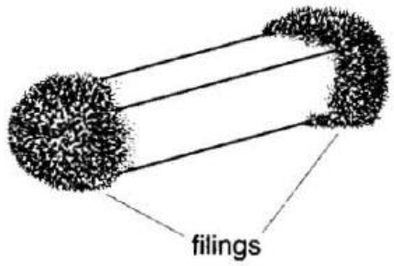

- A freely suspended magnet aligns itself in a north-south direction.
- The end of the magnet which points in the northerly direction is its north pole (or its north seeking pole); the other end is the south pole.

Field lines

A magnetic field is the region or space around a magnet where the effects of the magnet can be experienced.

How to

Using iron filings

1. Lay a sheet of paper over a bar magnet.
2. Sprinkle iron filings on the paper.

The filings will lie along the lines of force in the magnetic field.

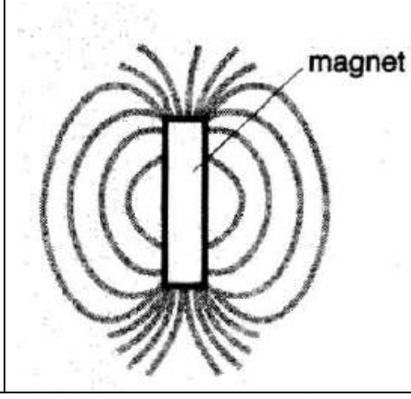

- magnetic field lines describe a curved loop from the north pole to the south pole of the bar magnet;
- the concentration of field lines is greatest near the poles.

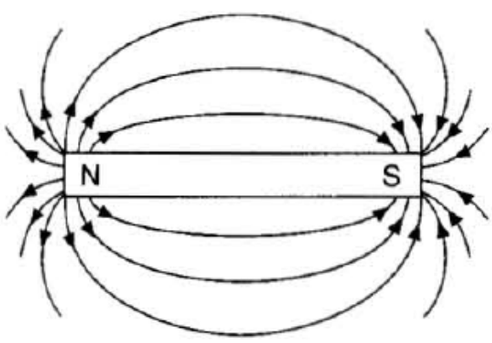

The field between two bar magnets.

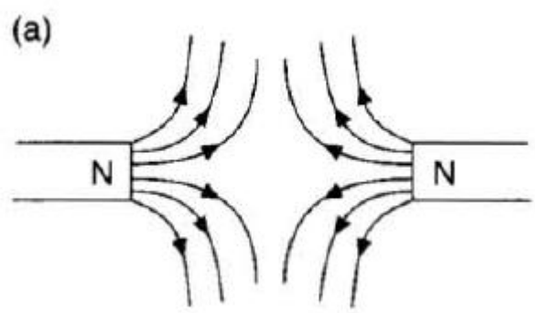

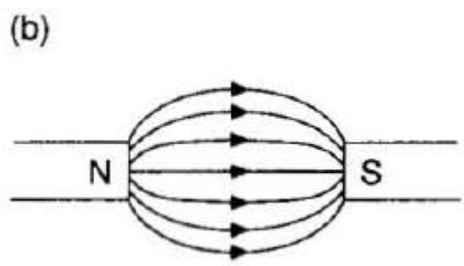

In a **uniform magnetic field** , the field lines are parallel and evenly spaced

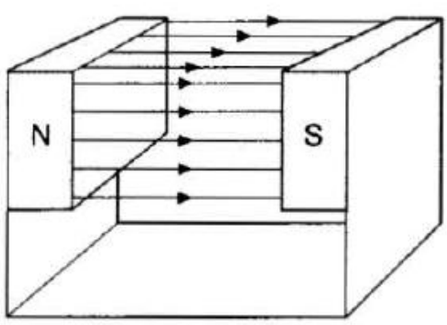

- **Magnetic flux-** Field lines represent the magnetic flux which measures the 'flow' of magnetism around a magnet. A strong magnet has a greater magnetic flux than a weak one.
- **Magnetic flux density** is the magnetic flux per unit area.
- the best measure of the strength of a magnet is the magnetic flux density.

Like magnetic poles repel.

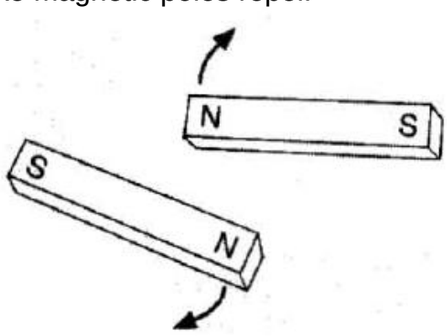

Unlike magnetic poles attract.

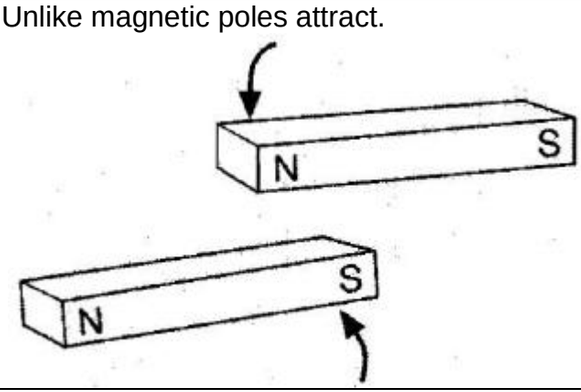

- Magnetic materials can be thought of as consisting of tiny magnets.
- These tiny magnets are called domains.

When the material is magnetized the domains align themselves in an orderly fashion. This produces a north pole at one end and a south pole at the other.

Each domain has its own north and south pole.

- In the unmagnetized state, the domains of a given material are randomly oriented.

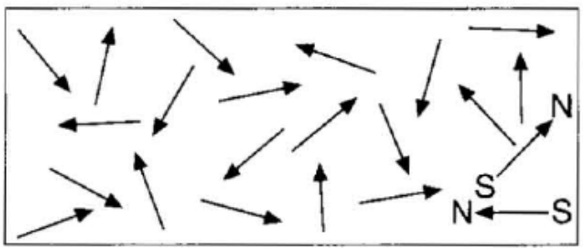

In this random orientation, the domains cancel each other's effects.

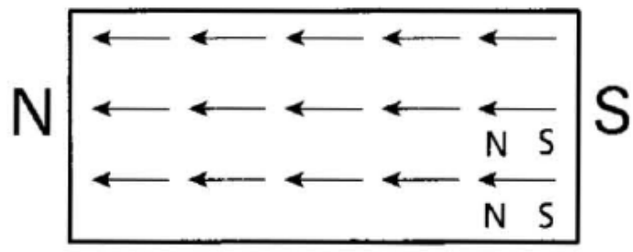

Magnetization by Induction: The process by which a magnet can induce a magnetic field in an unmagnetized iron bar or other material, without the two touching.
The magnetic field of the magnet causes the internal molecular magnets or domains of the iron bar to align themselves in the same direction closer to it by attracting the south poles of the domains.

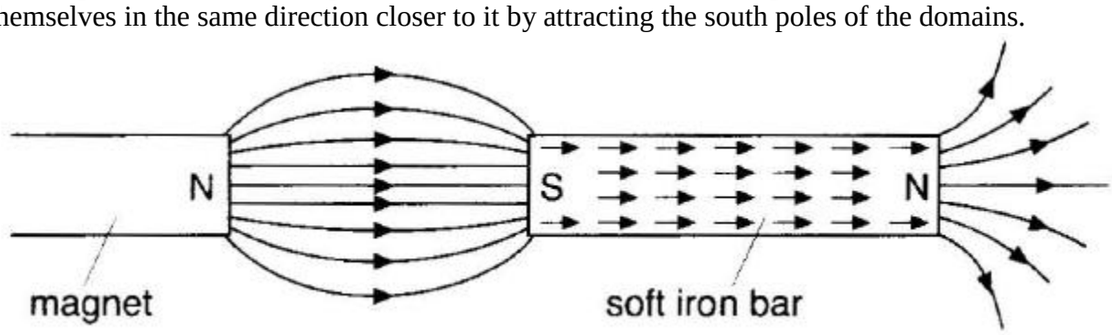

The north pole of the magnet then attracts the induced south pole of the bar.

magnetic properties of materials

Permeability is a measure of the ease with which magnetic flux passes through a substance.
Magnetic flux passes more easily through iron than through steel.
Iron is said to be **magnetically soft.**
Iron has a high permeability.
Steel, on the other hand, is described as being **magnetically hard**. Steel has a low permeability. What this means is that it is easier to magnetize iron than it is to magnetize steel.
However, steel retains magnetism better than iron. Steel is said to have a higher magnetic **retentivity** than iron.

USES OF MAGNETIC MATERIALS

Material	Composition	Uses
Alnico	An alloy of Al, Ni, Co, Cu and Fe. This material has a high retentivity	In making permanent magnets, e.g. bar magnets for general laboratory use
Mumetal	An alloy of Ni, Fe and Cu. It has a high permeability	Excellent for shielding electrical equipment
Magnadur	Ceramic type magnets made by subjecting ferrite to intense heat and pressure	Makes the strongest of permanent magnets. Used, for example, in electric motors

The magnetic effect of an electric current

When an electric current passes through a wire a magnetic field is produced around the wire. If the wire is wound into a coil the resulting magnetic field is similar to that of a bar magnet with north and south poles.

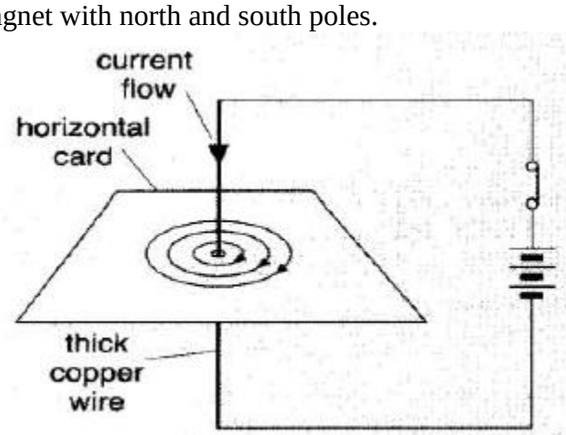

How to map the field around a straight conductor

1. Pass a straight wire through a hole in a sheet of card board and connect it in a circuit as shown.
2. Pass a current through the wire.
3. Sprinkle iron filings on the card round the wire.
4. Observe that the filings on the card assume a definite pattern.

Expected results:

- the field lines make a pattern of concentric circles, symmetrical around the conductor at the centre;
- the pattern is densest nearest the conductor (wire);
- the magnetic field is strongest near the conductor. but gets progressively weaker with distance:

the magnetic field is in a plane perpendicular to the direction of current through the conductor.

To predict the direction of the magnetic field: we can use the 'right-hand grip rule'

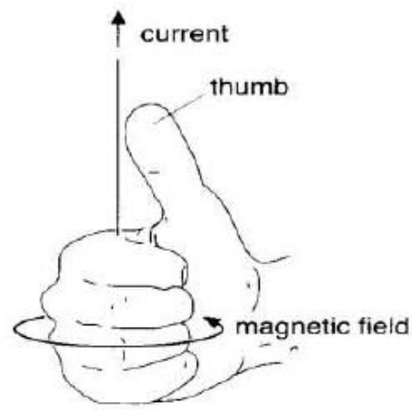

'Right-Hand Grip Rule' If a conductor carrying a current is gripped with the right hand, with the thumb pointing along the conductor in the direction of conventional current, the curl of the fingers around the conductor indicates the direction of the magnetic lines of force.

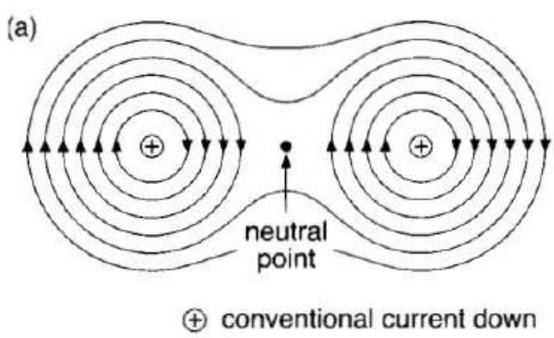

Field lines associated with **two adjacent straight conductors** carrying currents in the **same direction**. No net magnetic effect is experienced at the neutral point

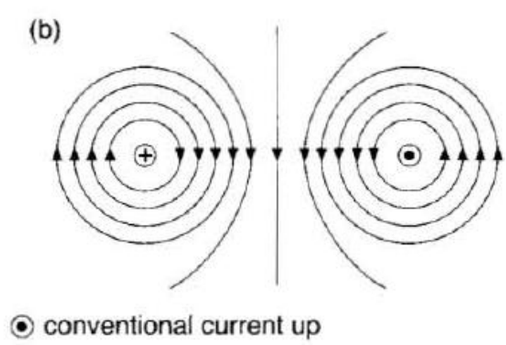

Field lines associated with two adjacent straight conductors carrying currents in opposite directions.

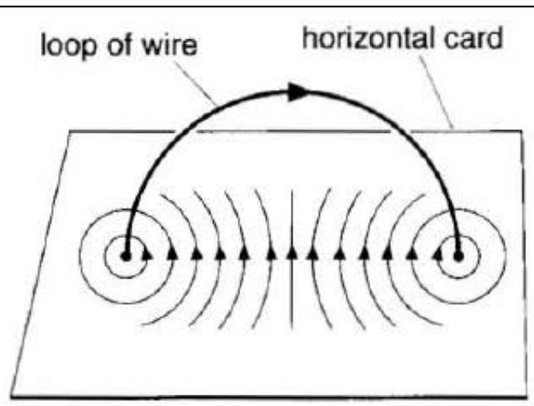

Magnetic field round a current-carrying loop of wire.

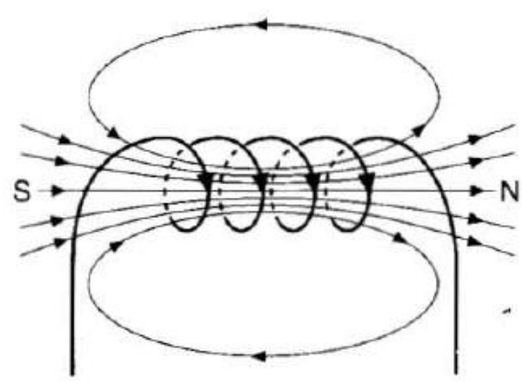

The field of a solenoid.

Whereas the field inside the solenoid is uniform, the field outside the solenoid is like that of a bar magnet.

The north and south poles of a solenoid can be determined using the following modification of the right-hand grip rule.

Imagine a solenoid gripped in the right hand in such a way that the curled fingers are indicating the direction of conventional current, then the

	thumb points to the north pole.
Electromagnets An electromagnet is a temporary magnet which has magnetism only when current is passing through a coil or wire. The strength of the magnetic field associated with an electromagnet can be increased by: ❑ increasing the current: ❑ increasing the number of turns of coil per unit length: ❑ including a soft iron core.	**Uses of Electromagnets** Electromagnets are used: ❑ to lift iron rods and steel bars and sheets in steelworks: ❑ as cranes in scrap yards: ❑ in hospitals. to remove iron or steel splinters from eyes: ❑ in the electric bell: ❑ in the cores of transformers: ❑ in control systems.
How to make a Simple electromagnet 1 Wind about 1.5 m of SWG 26 covered copper wire on an iron core, *e.g.* a 12 cm iron nail. Keep the turns close and wind in the same direction. 2 Connect the ends of the wire as shown in the diagram. 3 Turn on the switch and count the number of paper clips or iron staples that the electromagnet will hold. 4 Adjust the current and note the new number of clips or staples which are now supported.	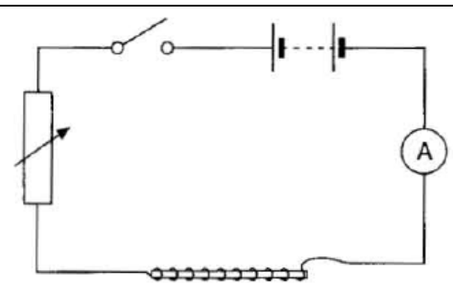 *A simple electromagnet*
The magnetic relay The electromagnetic relay is a current-operated *device* that opens or closes contacts and. in so doing, controls the flow of current in one or more separate circuits. The diagram to the right shows a simple electromagnetic relay. This relay uses a small current to switch on a much larger one. If switch S 1 is opened. no current flows and the contacts S2 are also opened. The lamp does not light. The lever system has three interconnected parts L. M and N. if switch S1 is closed, a current flows through the coil. a magnetic field is set up and L, which is made of soft iron. is attracted to the electromagnet E. N then makes contact with S2, closing it. A current flows in circuit C2 and the lamp lights.	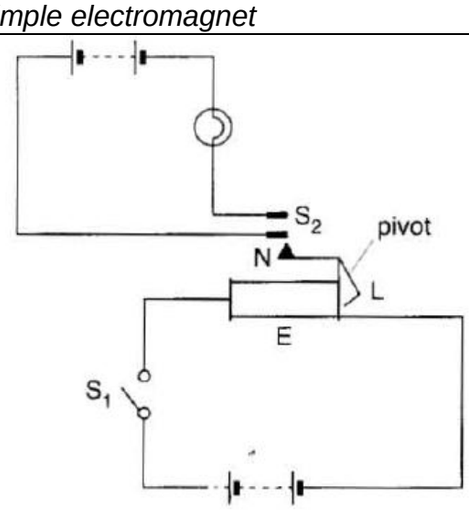 *A simple electromagnetic relay*
Uses of The magnetic relay ❑ in the switching system of a car. ❑ to switch on X-ray machines, ❑ in telephone exchanges and ❑ for switching on cameras on rockets.	
The force on a current-carrying conductor in a magnetic field How to show there IS a force on a current carrying conductor In magnetic field 1 Set up the arrangement shown on the right. 2 Observe that there is no movement of the aluminium strip with the switch open. 3 Close the switch and observe what happens. The strip moves because a force acts on it. This force arises from the interaction between the current and the magnetic field. **N.B.**:The size of the force depends on: • the strength of the magnetic field: • the value of the current.	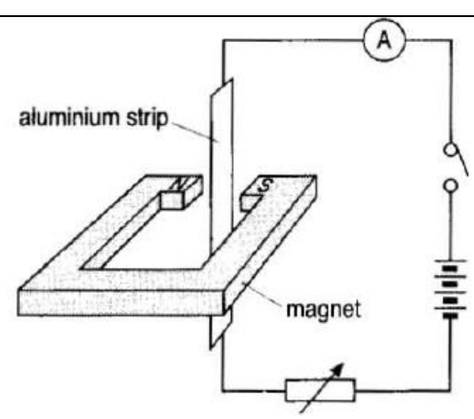 *Demonstrating the force on* a *conductor*

The direction of the force which results from the interaction of a current and a magnetic field can be predicted from **'Fleming's left-hand rule'** which states that:
If the forefinger. second finger and thumb of the left hand are held at right angles to one another, and if the forefinger points in the direction of the field and the second finger in the direction of the current. then the thumb points in the direction of the force which is acting on the conductor carrying the current.

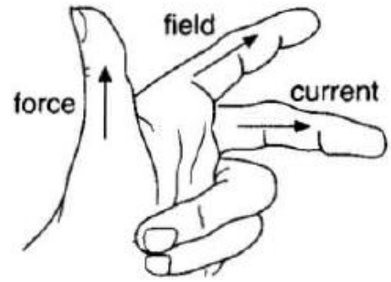

'Fleming's left-hand rule'

magnetic flux when a current-carrying conductor is placed in a uniform magnetic field

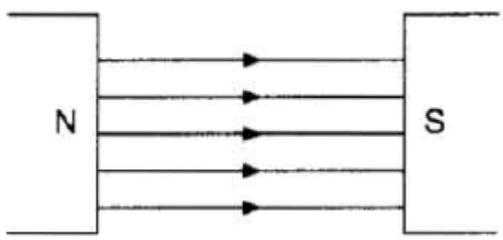

Uniform field

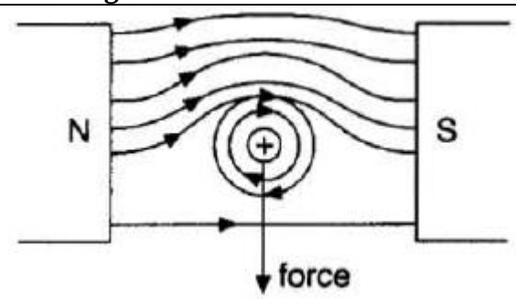

The interaction of the two *fields*

The field above the conductor is stronger than the field below it.

- Above the conductor. the field of the conductor and that of the magnet are acting in the same direction. The field is strengthened.
- Below the conductor. the field of the conductor and that of the magnet are in opposition. The field is weakened.

Consider the figure 4. If you apply the left-hand rule, you will see that the left-hand side of the coil moves down, whereas the right-hand side of the coil moves up. The coil rotates clockwise. We say that:
A couple acts on a rectangular current-carrying coil which is placed in a uniform magnetic field.

N.B.: A couple is a pair of forces equal in size but opposite in direction which cause an object to rotate.

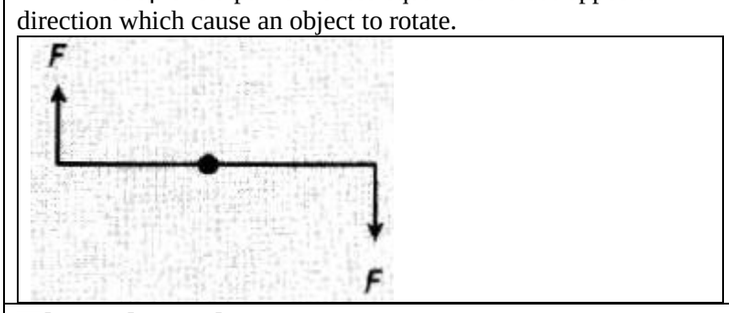

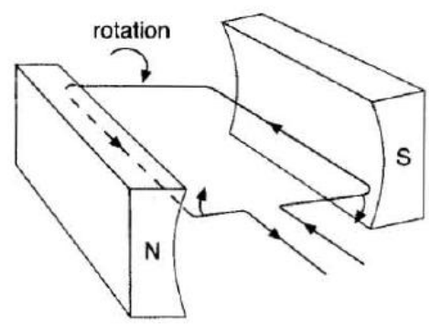

fig.4

The electric motor

A motor is a rotating device which converts electrical energy into mechanical energy.

Simple d.c. motor

- current flows from the d.c. supply through brush A to the coil and back to the supply through brush B.
- It creates a magnetic field round the coil. Current flow is such that the north pole of the coil is next to the north pole of the permanent magnetic field. Likewise, the south pole of the coil is next to the south pole of the magnetic field. The magnetic field of the coil opposes that of the permanent magnet. Repulsion takes place.
- Since the permanent magnet is fixed and the coil moveable, the coil rotates. As the coil rotates its north pole is attracted to the south pole of the permanent magnet.
- At the instant when two unlike poles are about to line up. The commutator changes the polarity of the coil. Repulsion takes place and the coil continues to rotate.

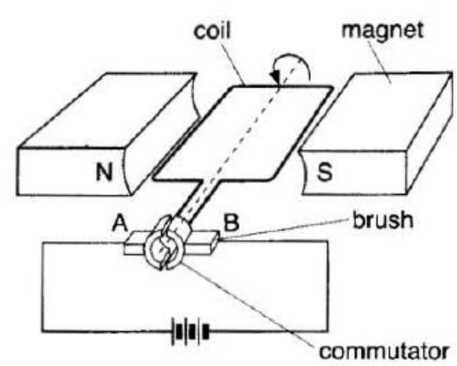

Simple d.c. motor

The simple d.c. motor can be improved by:
• using an electromagnet in place of the permanent magnet;
• using more than one loop in the coil:
• winding the coils around a soft iron core(called an **armature).**

The loudspeaker

The loudspeaker is a device for converting electrical signals into audible sound. In the commonest type of loudspeaker a changing current flows through a coil which is suspended between the poles of a specially shaped magnet. The varying current produces a varying magnetic field in the coil. A varying force is exerted on the coil which moves in and out. The coil is attached to a cone made of stiff paper. The motion of the coil is translated to the cone which moves in unison with the electrical signal. The vibrating cone converts the electrical signal to audible sound.

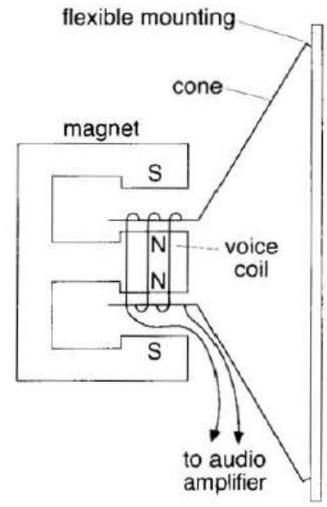

Induced e.m.f.

An e. m.f. is induced when a conductor moves relative to a magnetic field .

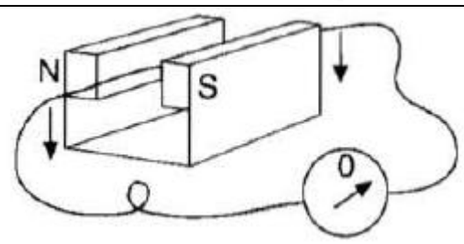

The conductor is moved vertically down. The galvanometer needle deflects to the right while the conductor is moving but returns to zero once motion ceases.

The direction of the induced current can be predicted from **Fleming's right-hand rule**

If the thumb and first two fingers of the right hand are held mutually at right angles, with the first finger in the direction of the magnetic field and the thumb in the direction of motion, then the second finger shows the direction of the induced current.

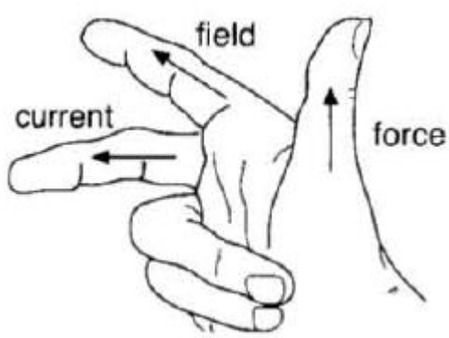

An e.m.f. is also induced if a magnet moves relative to a coil or solenoid

The simple a.c. generator

An a.c. generator is a mechanical device which converts rotational energy into electrical energy.

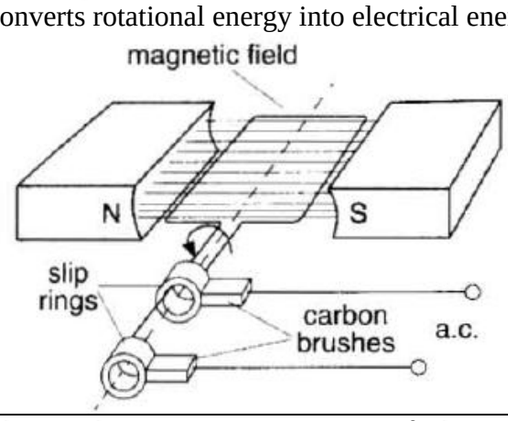

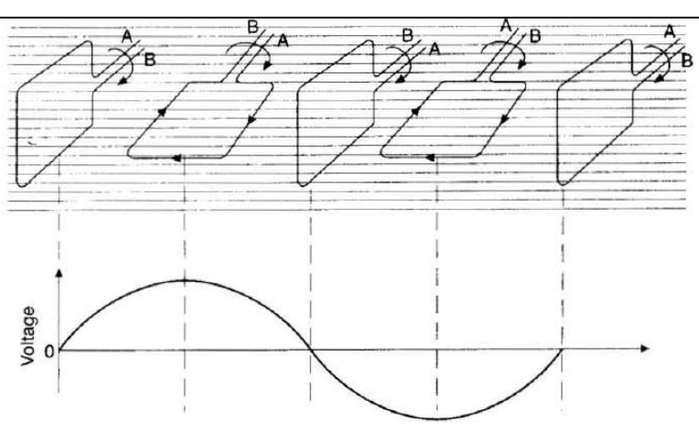

The simple a.c. generator consists of a loop or coil of wire which is rotated in a magnetic field. As the coil rotates, it cuts the magnetic field and a voltage is induced across it. This voltage causes a current to flow. Circular slip rings, attached to the ends or the coil lead the current away. Carbon brushes ensure that good electrical contact is made with the slip rings.

As the coil rotates in the magnetic field an alternating current is produced as shown in the diagram on the left. On one half cycle the coil cuts the magnetic field in one direction. On the other half cycle the coil cuts the magnetic field in the opposite direction.

The simple d.c. generator

The d.c. generator. or dynamo, is similar to the a.c. generator except that the slip ring is segmented, i.e. split into two or more parts. A segmented slip ring is called a commutator

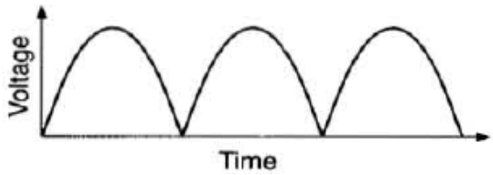

The output from a simple dc. generator

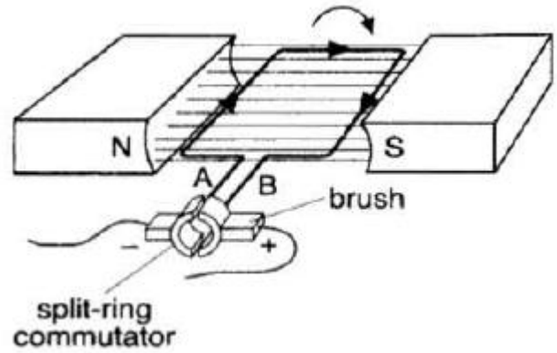

The transformer

- Transformers transfer blocks of power from one circuit to another using a.c.
- The essential features of a transformer are two coils of wire, called the **primary coil** and the **secondary coil**, which are wound around different sections of the same iron core. When an alternating voltage is applied to the primary coil it creates an alternating current in that coil, which induces an alternating magnetic field in the iron core.
- This changing magnetic field induces an e.m.f., which creates a current in the secondary coil.

For step-up transformers:

N_s the number of turns of wire in the secondary coil is greater than the number of turns N_p in the primary coil.
i.e. $N_s > N_p$

For step-down transformers:

$N_p > N_s$

For an **ideal transformer**:
power *in* the primary = power *in* the secondary

$$\frac{V_s}{V_p} = \frac{N_s}{N_p} = \frac{I_p}{I_s}$$

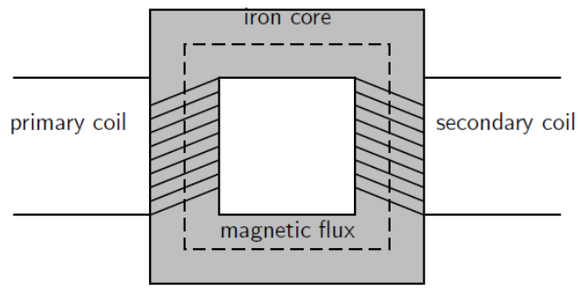

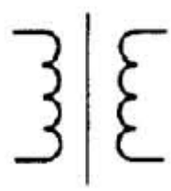

The symbol for a transformer.

Transformer efficiency is improved if
- coils are made of low resistance material, i.e. copper;(to minimized energy loss due to the heating effect of current)
- the core is laminated;(to reduce eddy currents)
- core design ensures good flux linkage between primary and secondary;
- the core is made of soft iron

N.B.: transformers only work with a.c. because only a.c. can generate a varying magnetic field.

LOGIC GATES

A logic gate is essentially a high-speed switch. We shall consider logic gates with a maximum of two (2) inputs. The inputs and the corresponding outputs will be displayed in the form of a truth table.

Number of possible input combinations, **n= 2^x** where x is the number of primary inputs.

NOT gate

This operation has one input and one output. The value of the output is the opposite of that of the input.

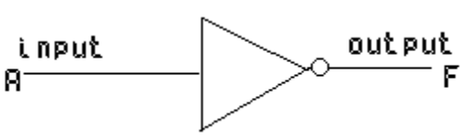

There is 1 primary input ∴Number of possible input combinations is $2^1 = 2$

Truth table

$F = \bar{A}$

A	F
1	0
0	1

AND gate

This operation has two or more inputs and one output. The output is 1 if all inputs are 1, otherwise it is 0.

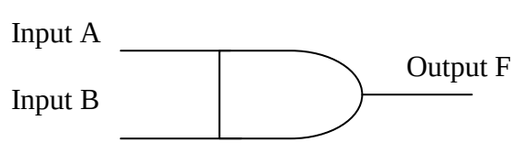

There are 2 primary inputs ∴Number of possible input combinations is $2^2 = 2 \times 2 = 4$

F = A.B Truth table

A	B	F
0	0	0
0	1	0
1	0	0
1	1	1

OR gate

This operation has two or more inputs and one output. The output is 1 if any of the inputs is 1, otherwise it is 0.

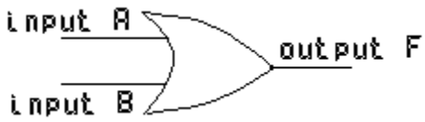

There are 2 primary inputs ∴Number of possible input combinations is $2^2 = 2 \times 2 = 4$

Truth table

A	B	F
0	0	0
0	1	1
1	0	1
1	1	1

F = A + B

NAND gate

This operation may be considered as an AND operation followed by a NOT operation. It has two or more inputs and one output. The output is 0 if all the inputs are 1s, otherwise it is 1.

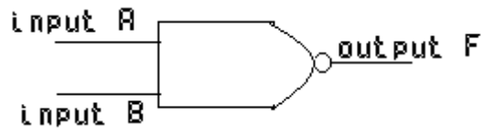

There are 2 primary inputs ∴Number of possible input combinations is $2^2 = 2 \times 2 = 4$

Truth table

A	B	F
0	0	1
0	1	1
1	0	1
1	1	0

$F = \overline{A.B}$

NOR gate

This operation may be considered as an OR operation followed by a NOT operation. It has two or more inputs and one output. The output is 0 if any of the input is 1, otherwise it is a 1.

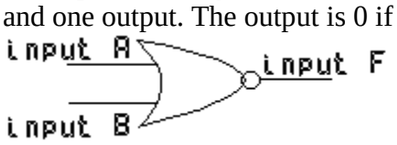

There are 2 primary inputs ∴Number of possible input combinations is $2^2 = 2 \times 2 = 4$

Truth table

A	B	F
0	0	1
0	1	0
1	0	0
1	1	0

$F = \overline{A + B}$

One of the major uses of logic gates is to control electronic systems. Combination of logic gates form more complex circuits which form the complex circuitry of computers.

Combination of logic gates

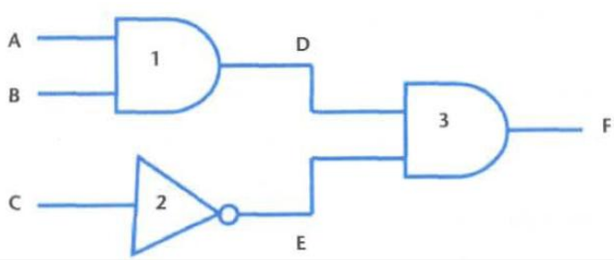

A, Band C are the primary inputs for this combination gate.

• D and E are outputs for the first two logic gates (1 and 2 respectively).

• D and E are also inputs for logic gate # 3 and can be considered as secondary inputs.

Input					Output
A	B	C	D	E	F
0	0	0	0	1	0
0	0	1	0	0	0
0	1	0	0	1	0
0	1	1	0	0	0
1	0	0	0	1	0
1	0	1	0	0	0
1	1	0	1	1	1
1	1	1	1	0	0

N.B.: to determine the number of possible input combinations for a set of combined logic gates, the secondary inputs are not considered.

Notice that the values for each column follow a specific sequence. For column #1 (input A) it is 00001111 (four zeros then four ones). For column # 2 (input B) it is 0011001 1 (two zeros alternated with two ones). For column # 3 (input C) it is 01010101 (a zero and a one are alternate to each other).

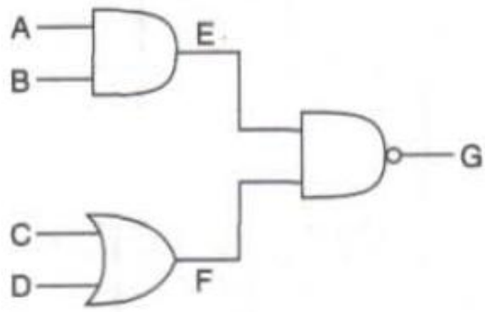

A	B	C	D	E	F	Output G
0	0	0	0	0	0	1
0	0	0	1	0	1	1
0	0	1	0	0	1	1
0	0	1	1	0	1	1
0	1	0	0	0	0	1
0	1	0	1	0	1	1
0	1	1	0	0	1	1
0	1	1	1	0	1	1
1	0	0	0	0	0	1
1	0	0	1	0	1	1
1	0	1	0	0	1	1
1	0	1	1	0	1	1
1	1	0	0	1	0	1
1	1	0	1	1	1	0
1	1	1	0	1	1	0
1	1	1	1	1	1	0

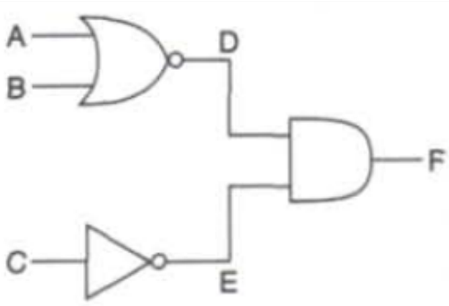

A	B	C	D	E	Output F
0	0	0	1	1	1
0	0	1	1	0	0
0	1	0	0	1	0
0	1	1	0	0	0
1	0	0	0	1	0
1	0	1	0	0	0
1	1	0	0	1	0
1	1	1	0	0	

Questions

Define the following:

a) truth table
b) logic gate
c) combinational logic.

Using truth tables, determine the final output of each of the combinations of gates below.

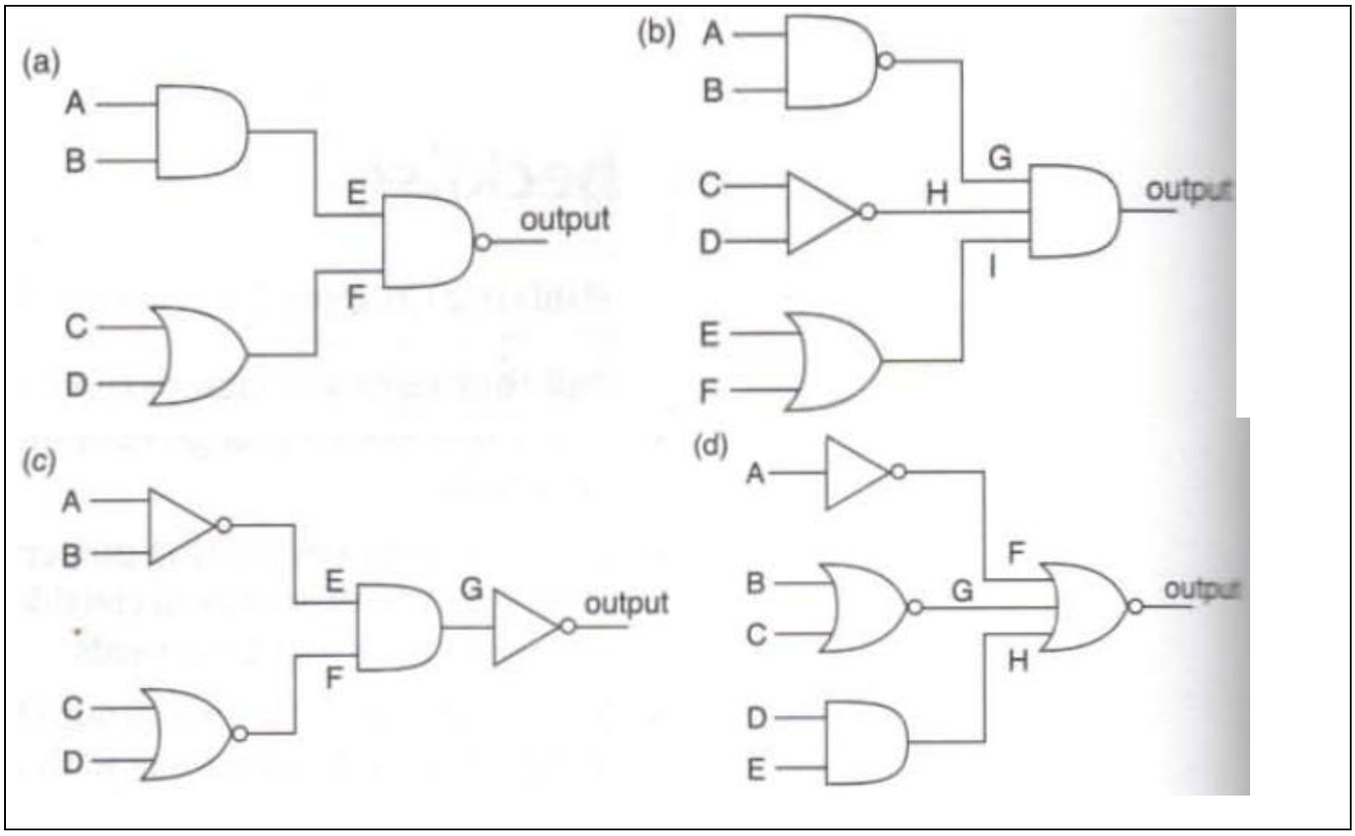
(a)
A
B
E
output
F
C
D
(b)
A
B
G
C
H
output
D
I
E
F
(c)
A
B
E
G
output
F
C
D
(d)
A
F
B
G
output
C
H
D
E